www.vadict.com

Vadict IIoT Solutions

Case Study – PrognoSense Electrical Signature Analysis

Condition monitoring for a centrifugal pump: case study

How Vadict's Electrical signature analysis alerted the customer of stator fault in a motor operated centrifugal pump installed across Tank lorry filling pump house.

Electrical signature analysis (ESA) is performed when the equipment is online (or "running"). It works on the principle that any variation in the equipment operation will be reflected in the supply voltage and operating current. Thereby, ESA provides the health status of the motor and of the driven load coupled to it.

ESA Data Acquisition

ESA is performed by using current transformers and voltage leads installed in the motor control center. All the three phases of current and voltage are captured at a high resolution to monitor the health of the machine. The time domain data is converted to frequency domain to obtain the constituent frequencies present in the signal. Waterfall plots are also generated to visualize the variation of parameters over time. The solution provides insight into the mechanical and electrical faults associated with the motor load system.

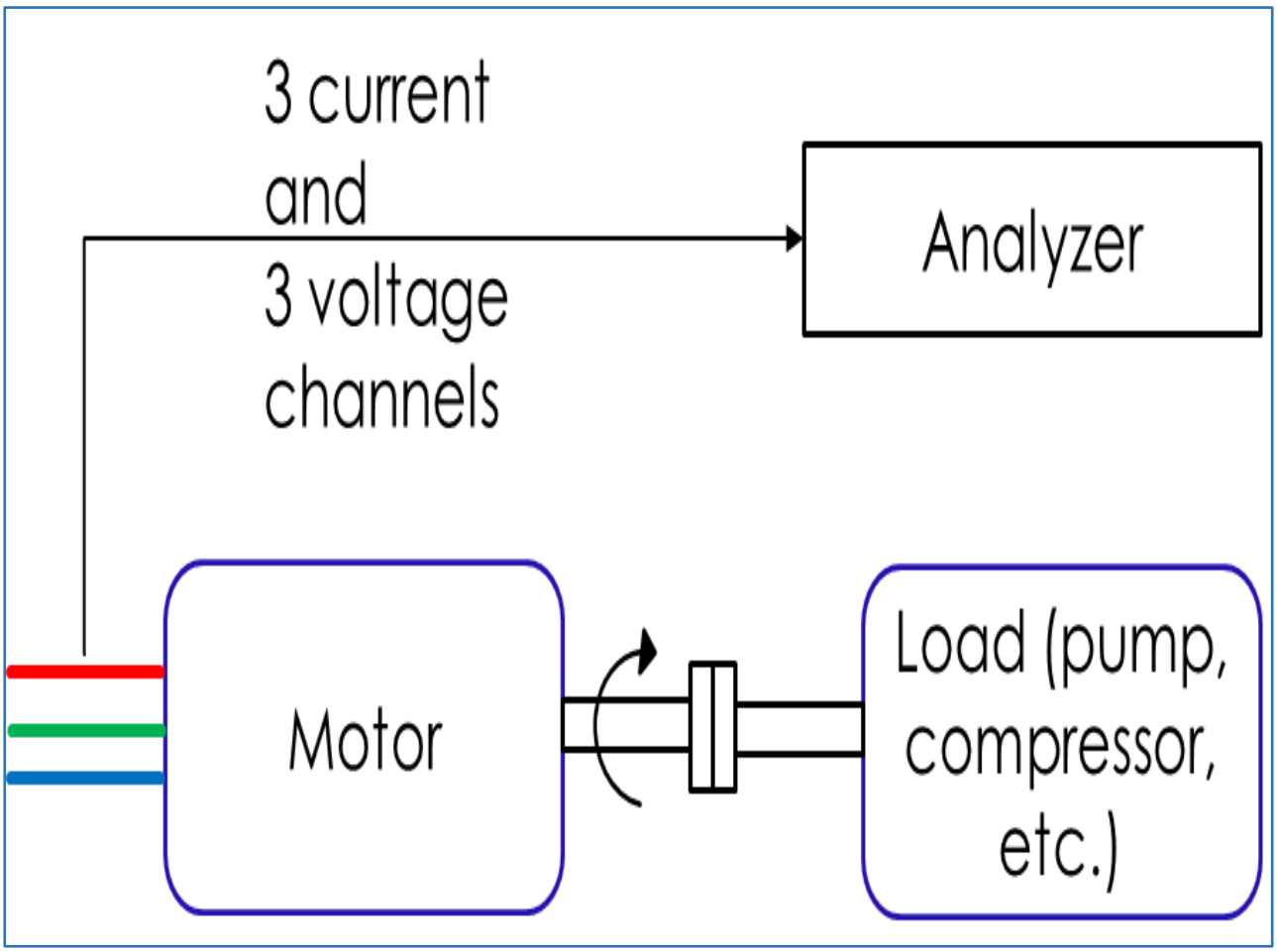

Failure Pattern

A 45 kW VFD-driven centrifugal pump indicated the development of a turn-to-turn fault.

ESA Diagnostics

The online results of high current and impedance unbalance, accompanied by comparable magnitudes, resulted in alerting the user of problematic internal coil connection. The software reports it as a turn-to-turn fault. The unbalance levels of current and impedance were evaluated for operational load above 40%.

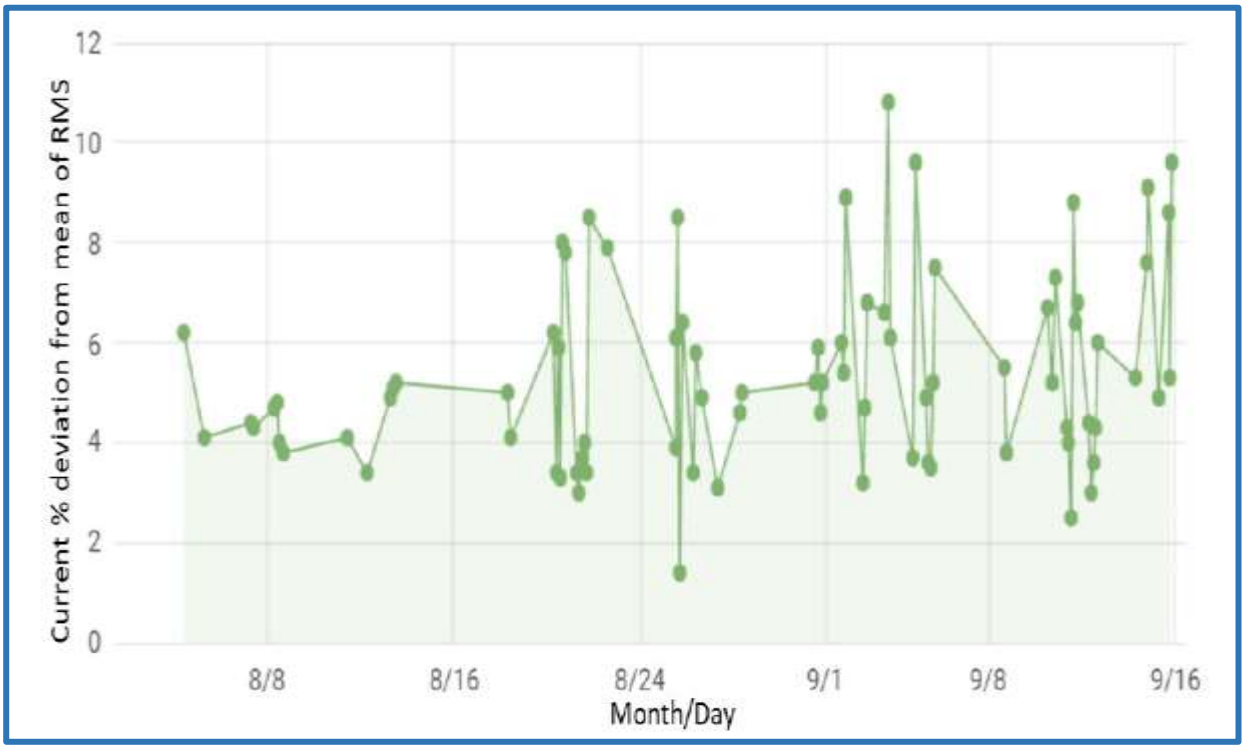

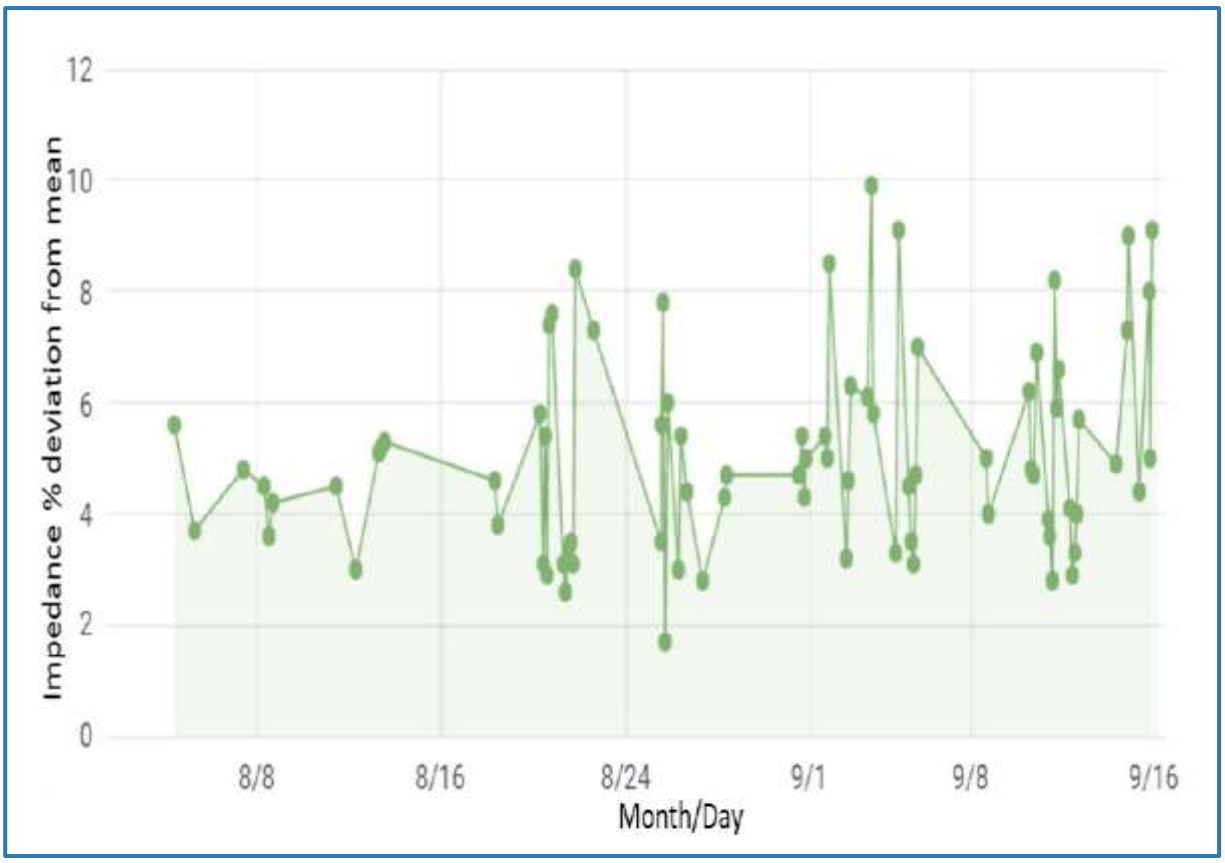

Concluded Outcome

During the scheduled maintenance window, customer discovered degraded stator winding. Corrective action was carried out by rewinding the motor coil.

The possibilities are endless.
Discuss your use-cases today:

chintan@vadict.com